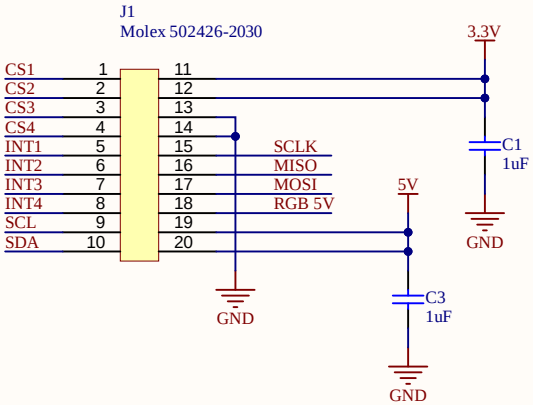


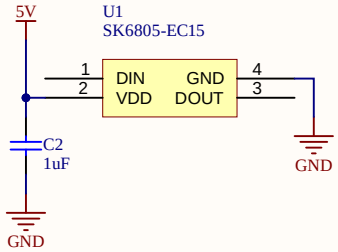


| | | | |
|---|---|---|---|
| TITLE | Twintig-IMUs.SchDoc | | |
| SIZE A4 | PROJECT Twintig IMUs | | VERSION v1.0 |
| VARIANT | [No Variations] | SHEET 1 OF 1 | |
| AUTHOR | Seb Madgwick | DATE 12/17/2024 | |

C3

C1

J1

U1C2

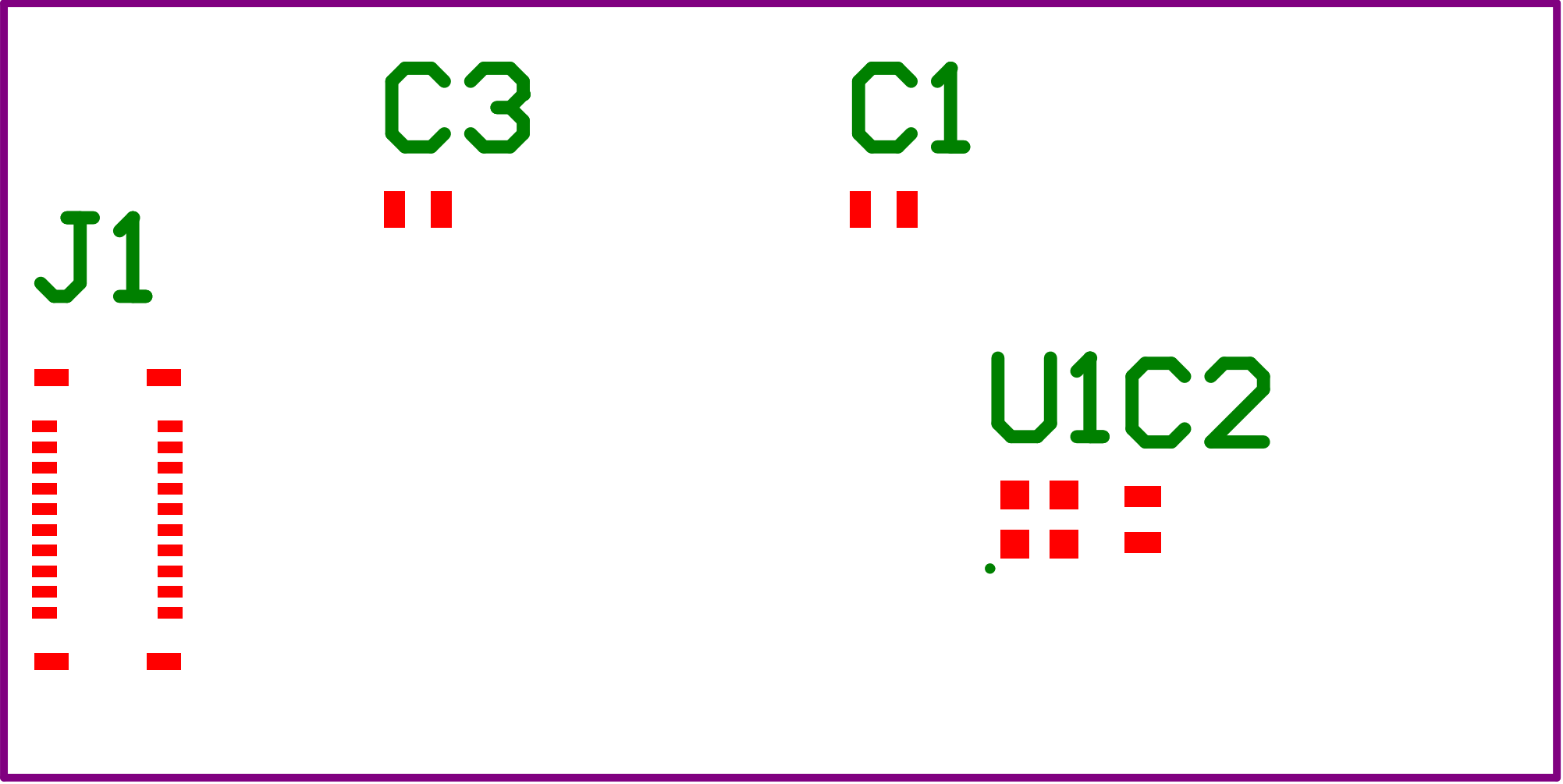
C3
C1
J1
U1
C2

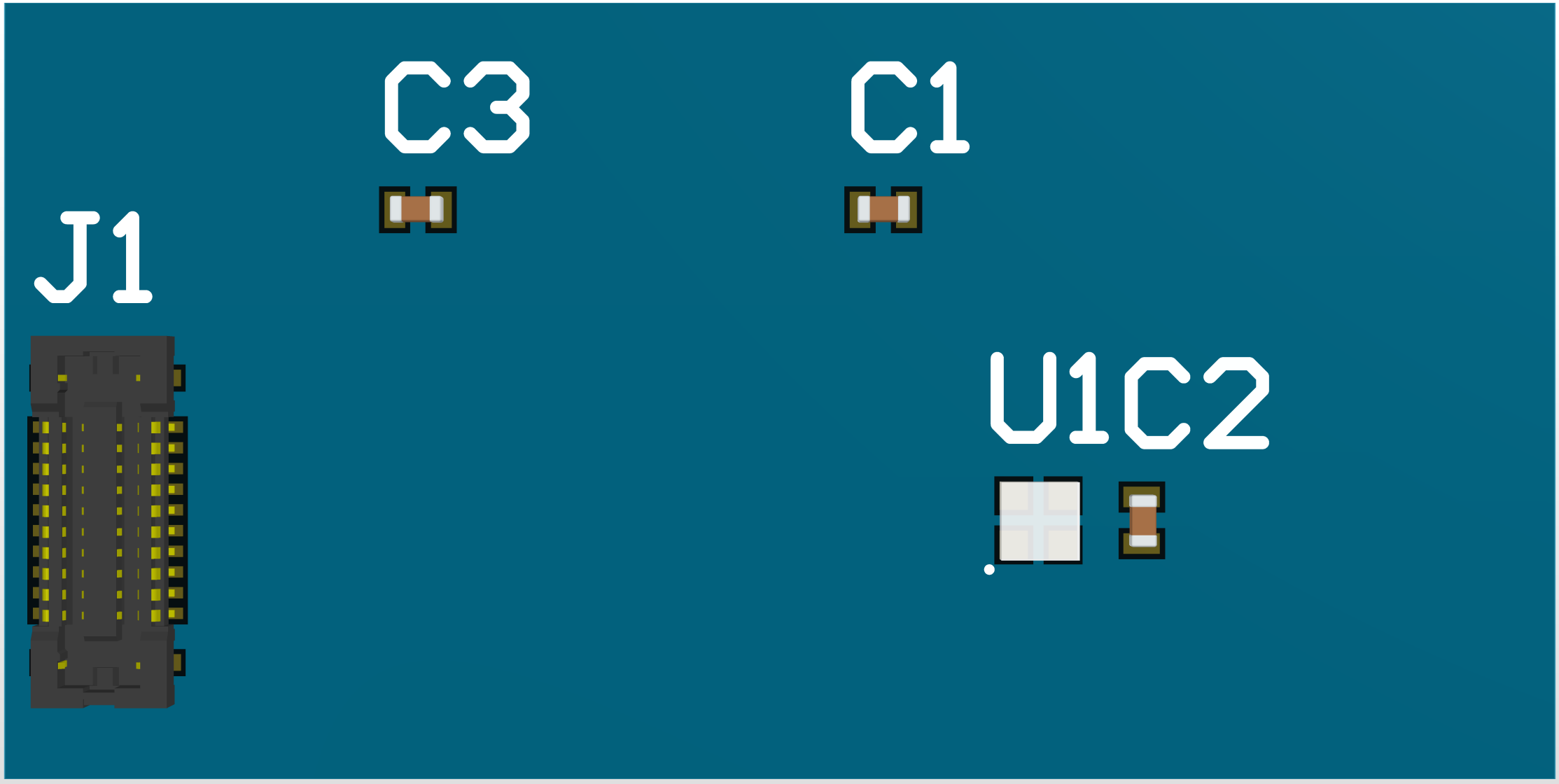
C3
C1
J1
U1C2

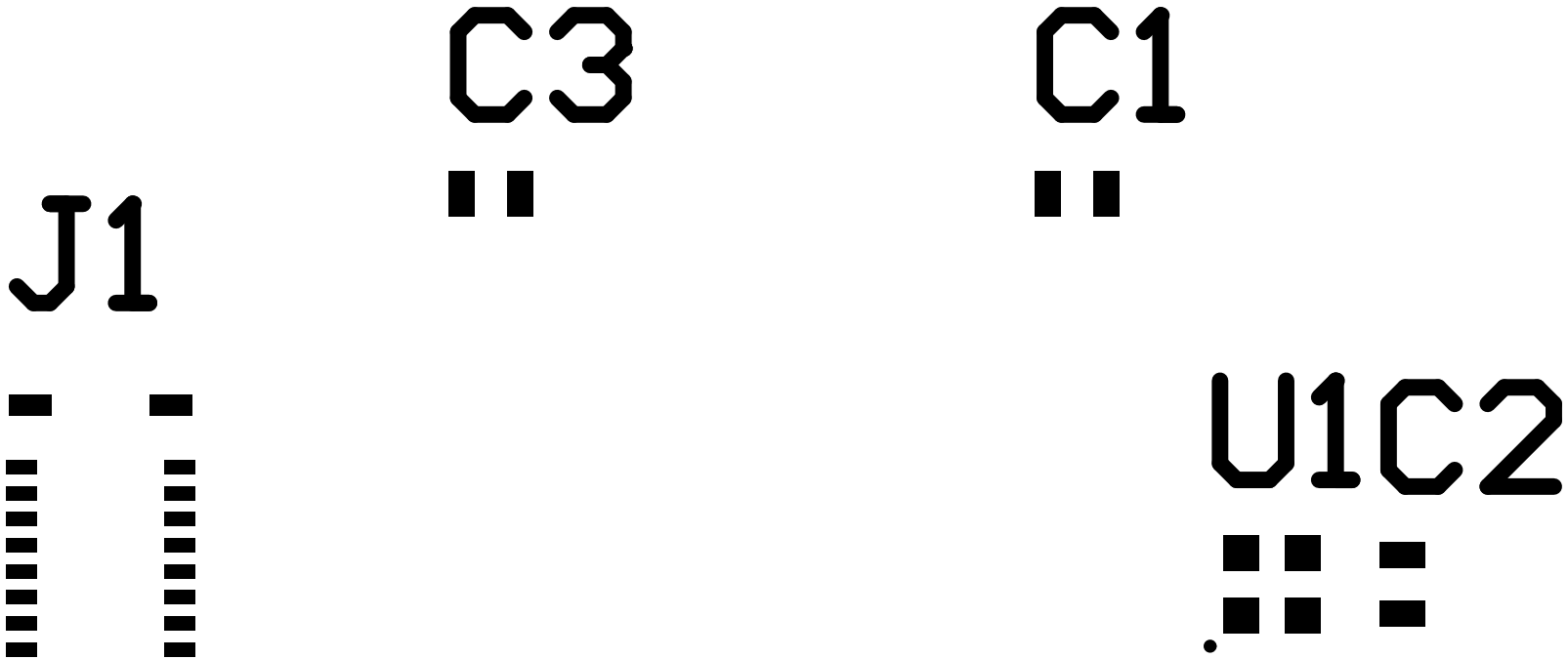
C3
C1
J1
U1
C2

| Designator | Quantity | Comment | Footprint |
|---|---|---|---|
| C1, C2, C3 | 3 | 1uF | Capacitor 0402 |
| J1 | 1 | Molex 502426-2030 | Molex 502426-2030 |
| U1 | 1 | SK6805-EC15 | SK6805-EC15 |